

真诚打造信誉　追求至上服务

Honest Creates Reputation　Pursue Better Service

盛川精工机械设备(湖南)有限公司

HUNAN SHENGCHUAN HYDRAULIC MACHINERY LTD. INC.

专业生产眼睛板 切割环 S 管

Specializes in manufacturing wear plates,cuttings and S-pipe valves

品质为本　诚信第一　客户至上



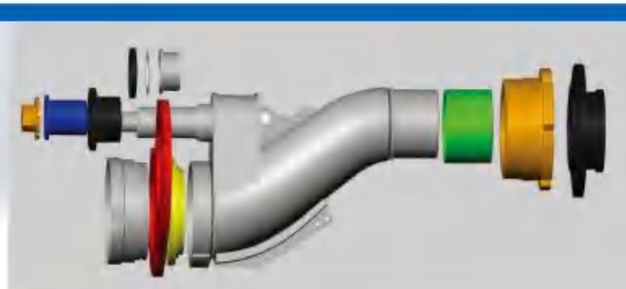

盛川精工机械设备(湖南)有限公司

HUNAN SHENGCHUAN HYDRAULIC MACHINERY LTD. INC.

地址：湖南省株洲市荷塘区中材路1616号

Add：No.1616, Zhongcai Road, Hetang District,Zhuzhou, Hunan

手机/Mob：133 0189 6273

邮箱/E-mail：gm@chinashengchuan.com

网址/Http：www.chinashengchuan.com

中国 湖南

China Hunan



企业简介

盛川精工机械设备(湖南)有限公司是以大件机械加工为主的民营企业，坐落于硬质合金之乡株洲，厂房面积 3000 平方米，生产设备齐全，技术力量雄厚。公司借助硬质合金耐磨材料研究领域中杰出的专家教授提供的专利技术支持，采用更合理的结构设计与全新的生产加工工艺生产了用与混凝土输送泵设备的高耐磨合金眼睛板、切割环及其相关配套的产品，深受广大用户的认可，并与国内外知名企业配套生产。本公司产品保证质量，价格合理。公司通过国际质量管理体系认证，严把原材料关，严格控制生产过程，并有专业的检测设备，确保产品质量。

公司将继续秉承“ 技术创新造就卓越品质，优质服务赢得用户信赖 ”这一经营理念。我们一起携手同行，共享科技成果，共创事业的辉煌。公司本着质量第一，客户至上的原则，为国内外客户提供快捷、优质、高效完美的服务，盛川精工机械设备(湖南)有限公司热忱欢迎您的到来！

“ 盛川精工 为您制造 专业精神 诚信服务 ”

Company Introduction

HUNAN Shengchuan Hydraulic Machinery Ltd.Inc.is a private enterprise which focus on processing large-scale machineries, it’ s located in the town of Carbide -- Zhuzhou, the plant covers an area of 3000 Square meters, with completed production equipment and strong technical force. With the patent technology supported by the outstanding expert professors in the field of carbide wear-resistant materials, we are using more reasonable structure design and new production processing technology to produce high wear-resistant alloy wear plate and cutting ring and related products which are used for concrete pump equipment, our products are recognized by the majority of users, and we cooperate with many well-known enterprises in domestic and abroad. Our company's products are with high quality and reasonable price. Our company are approved by the International Quality Management System Certification, with strict quality control of raw materials and production process, and we have professional testing equipment to ensure product quality.

Shengchuan Hydraulic Machinery, will continue to adhere to the business philosophy:"technological innovation to create excellent quality, high quality service to win the trust of the users". Let’ s work together to share the fruits of science and technology, create a glorious business. Our company are in principle of "Quality first, and Customers first", to provide customers in domestic and abroad with fast, high quality, efficient and perfect service. We warmly welcome you to visit us!

"Shengchuan Hydraulic Machinery, Made for you with Professional Spirit and Integrity Service".

盛川精工机械设备(湖南)有限公司
HUNAN SHENGCHUAN HYDRAULIC MACHINERY LTD. INC.

THE MOTIVATION
OF ENTERPRISE'S DEVELOPMENT
企业发展的原动力



CONTENTS | 目录



Spectacle wear plate and cutting ring series, ZL —— 01
Spectacle wear plate and cutting ring series, ZL —— 02
Spectacle wear plate and cutting ring series-SY —— 03
Spectacle wear plate and cutting ring series-XG —— 04
Spectacle wear plate and cutting ring series-Schwing —— 05
Spectacle wear plate series- PM(Putzmeister) —— 06
Spectacle wear plate and cutting ring series- HONGDELI —— 07
Spectacle wear plate and cutting ring series- Beiqi FUKUDA —— 08
Tungsten carbide series- ring plate class —— 09
Tungsten carbide series technique parameter —— 10
S valve assembly fittings series of the delivery pump syestem —— 11
S valve assembly fittings series of the delivery pump syestem —— 12
S valve assembly fittings series of the delivery pump syestem —— 13
S valve assembly fittings series of the delivery pump syestem —— 14
S valve assembly fittings series of the delivery pump syestem —— 15
S valve assembly fittings series of the delivery pump syestem —— 16
Delivery pump housing accessories series —— 17
Delivery pump housing accessories series —— 18
Delivery pump housing accessories series —— 19
Delivery pump housing accessories series —— 20

企业远景 Corporation Vision

成为工程机械配套行业领先企业
Be as a poineer in the field of construction machinery supporting

经营理念 Management idea

以市场为导向，以质量创品牌，以创新促发展
Market-oriented，quality creates brand，
innovation promotes development



诚信 Sincerity

企业经营之根本，力求顾客之最大满意度
The root of enterprise management, and strive to the maximum customer satisfaction

专业 Profession

企业经营之资产，提供高品质的产品与服务，以立足市场
The assets of an enterprise to provide high quality products and services to the market.

核心价值 Core value

客户导向　品质成就未来
Customer driven quality wins future
以人为本　合作创造价值
People oriented cooperation creates value

创新 Innovation

企业成长之原动力，创造顾客价值，提升企业核心竞争力
The driving force of enterprise growth, creating customer value, enhancing the core competitiveness of enterprises







Modern equipment High quality guarantee
---Quality is our primary productivity

Our company consistently runs through the theory of "Customers are our paramountcy , Honesty is our basement". As the traditional saying goes "Honesty, what God believes; Integrity, what people pursues ", so honest not only determines the social identity and status of major market, but also an invisible capital could be promoted. Meanwhile , enterprise should keep the stereotypical honest to every customer by following the attitude " From the customer , to the customer " in the service .

Following the customer-focused and market-guided theory, using professional intellectuals, particular knowledge, extensive experience and strict rules to accomplish every programme, so the customer can enjoy the cost-effective service .In addtion, handling the vulnerable relationship of customers and cooperative partners is indispensible, so we can accomplish the target of common development and mutual benefit. Serve every consumer steadfastly, keep every customer safely, make every customer enjoy our product and service happily. Honest and convenient service can satisfy customers' demands extensively, and we believe keeping assimilating the customers' suggestions , keeping enhancing managements' scale ,it's a correct way what we believed to dedicate ourselves to serve society.





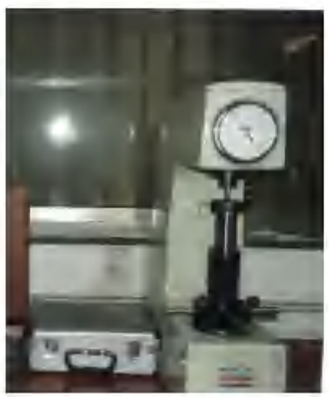





现代化设备 高质量保证
——品质是我们的第一生产力

“顾客至上，诚信为本”是我公司一贯奉行的服务理念，“诚信，天之道也，诚者，人之道也”诚信不仅决定着一个市场主流的社会身份和地位，而且更是一种可以升值的无形资产。企业在服务中本着“从客户中来，到客户中去”的态度，对每一位客户都要有不变的诚信。

以客户为中心，以市场为导向：以专业的人才，专业的知识，专业的经验，专业的程序认认真真对待每一个项目，让客户享受到性价比相当的服务，同事要妥善处理号与客户及伙伴的关系，实现共同发展，共同受益的目标，踏踏实实服务每一位客户，保证客户安全，放心想用本公司产品和服务。

以真诚、快捷的服务全面地、最大限度地满足消费者的需求，不断地吸取用户的意见，不断地完善赞誉，始终致力于服务社会的目标和心愿。









Product Display 01

Spectacle wear plate and cutting ring series, ZL
眼镜板切割环系列—— ZL; Zoomlion



Zoomlion technique parameter 中联技术参数

Product Photo	Model	Standard center distance	Abrasion-proof welding material	Carbide designation	Applicable models
	ZL-180(NEW)	230	VAUTID-150	HF20B	ZL concrete pump OD180 Trailer pump series
	ZL-200	250	VAUTID-150	HF20B	ZL concrete pump OD200 Trailer pump series
	ZL-235	270	VAUTID-150	HF20B	ZL concrete pump OD230 trailer pump, truck mounted concrete pump series
	ZL-260	300	VAUTID-150	HF20B	ZL concrete pump OD260 stand pump, pump truck series

Product Display 02

Spectacle wear plate and cutting ring series, ZL
眼镜板切割环系列—— ZL; Zoomlion



Spectacle wear plate 3D effect drawing
眼镜板3D效果图

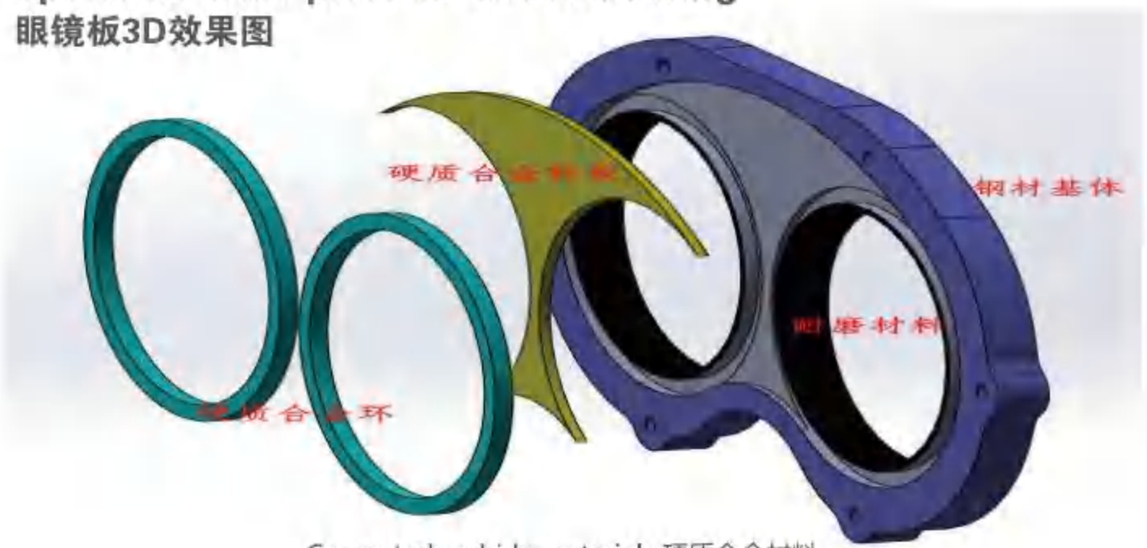

Cemented carbide materials 硬质合金材料
Steel base 钢材基体
Cemented carbide ring 硬质合金环
Abrasion-proof material 耐磨材料

Spectacle wear plate and cutting ring series- SY
眼镜板切割环系列—— SY



SY technique parameter SY技术参数

Product Photo	Model	Standard center distance	Abrasion-proof welding material	Carbide designation	Applicable models
	SY-200	235	VAUTID-150	HF20B	SY concrete cylinder diameter 200, trailer pump series
	SY-230	265	VAUTID-150	HF20B	SY concrete cylinder diameter 230, trailer pump , truck mounted pump series
	SY-260	295	VAUTID-150	HF20B	SY concrete cylinder diameter 260, stand pump (pump truck) series

Spectacle wear plate and cutting ring series-XG
眼镜板切割环系列—— XG, Xugong



XG technique parameter XG, Xugong技术参数

Product Photo	Model	Standard center distance	Abrasion-proof welding material	Carbide designation	Applicable models
	DN-260	260	VAUTID-150	HF20B	XG concrete cylinder diameter 260 trailer pump
	DN-260	265	VAUTID-150	HF20B	XG concrete cylinder diameter 260 trailer pump (truck mounted pump series)
	DN-260	295	VAUTID-150	HF20B	XG concrete cylinder 260 standpump (pump truck)series

Spectacle wear plate and cutting ring series-Schwing
眼镜板切割环系列——Schwing



Schwing technique parameter Schwing 技术参数

Product Photo	Model	Standard center distance	Abrasion-proof welding material	Carbide designation	Applicable models
	施维英200	230	VAUTID-150	HF20B	Schwing concrete cylinder diameter 200 trailer pump series
	施维英230	260	VAUTID-150	HF20B	Schwing concrete cylinder diameter 260 truck mounted concrete pump series
	施维英250	260	VAUTID-150	HF20B	Schwing concrete cylinder diameter 230 trailer pump series

Spectacle wear plate series- PM(Putzmeister)
眼镜板切割环系列——PM



PM technique parameter PM 技术参数

Product Photo	Model	Standard center distance	Abrasion-proof welding material	Carbide designation	Applicable models
	PM-valve	260	VAUTID-150	HF20B	PM concrete cylinder OD200 trailer pump series
	PM-chew	260	VAUTID-150	HF20B	PM concrete cylinder diameter 230 trailer pump, truck mounted concrete pump series
	PM-250	260	VAUTID-150	HF20B	PM concrete cylinder diameter 260 stand pump(truck pump) series

Spectacle wear plate and cutting ring series- HONGDELI
眼镜板切割环系列–鸿得利



HONGDELI technique parameter 鸿得利技术参数

Product Photo	Model	Standard center distance	Abrasion-proof welding material	Carbide designation	Applicable models
	HDL-200	261	Linkin welding rod	HF20B	Hongdeli concrete cylinder diameter 180 trailer pump series
	HDL-230	268	Linkin welding rod	HF20B	Hongdeli concrete cylinder diameter 230 trailer pump、truck mounted concrete pump series
	HDL-TMP	320	Linkin welding rod	HF20B	Hongdeli
	HDLB-47X (250)	298	Linkin welding rod	HF20B	Hongdeli concrete cylinder diameter 260 stand pump(truck pump) series

Spectacle wear plate and cutting ring series- Beiqi FUKUDA
眼镜板切割环系列–北汽福田



Beiqi FUKUDA technique parameter 北汽福田技术参数

Product Photo	Model	Standard center distance	Abrasion-proof welding material	Carbide designation	Applicable models
	FT-200	235	全合金	HF20B	FUKUDA concrete cylinder diameter 200 trailer pump series
	FT-230	265	全合金	HF20B	FUKUDA concrete cylinder diameter 230 trailer pump、truck mounted concrete pump series
	FT-260	295	全合金	HF20B	FUKUDA concrete cylinder diameter 260 stand pump(truck pump) series

Tungsten carbide series- ring plate class
硬质合金系列–环板类

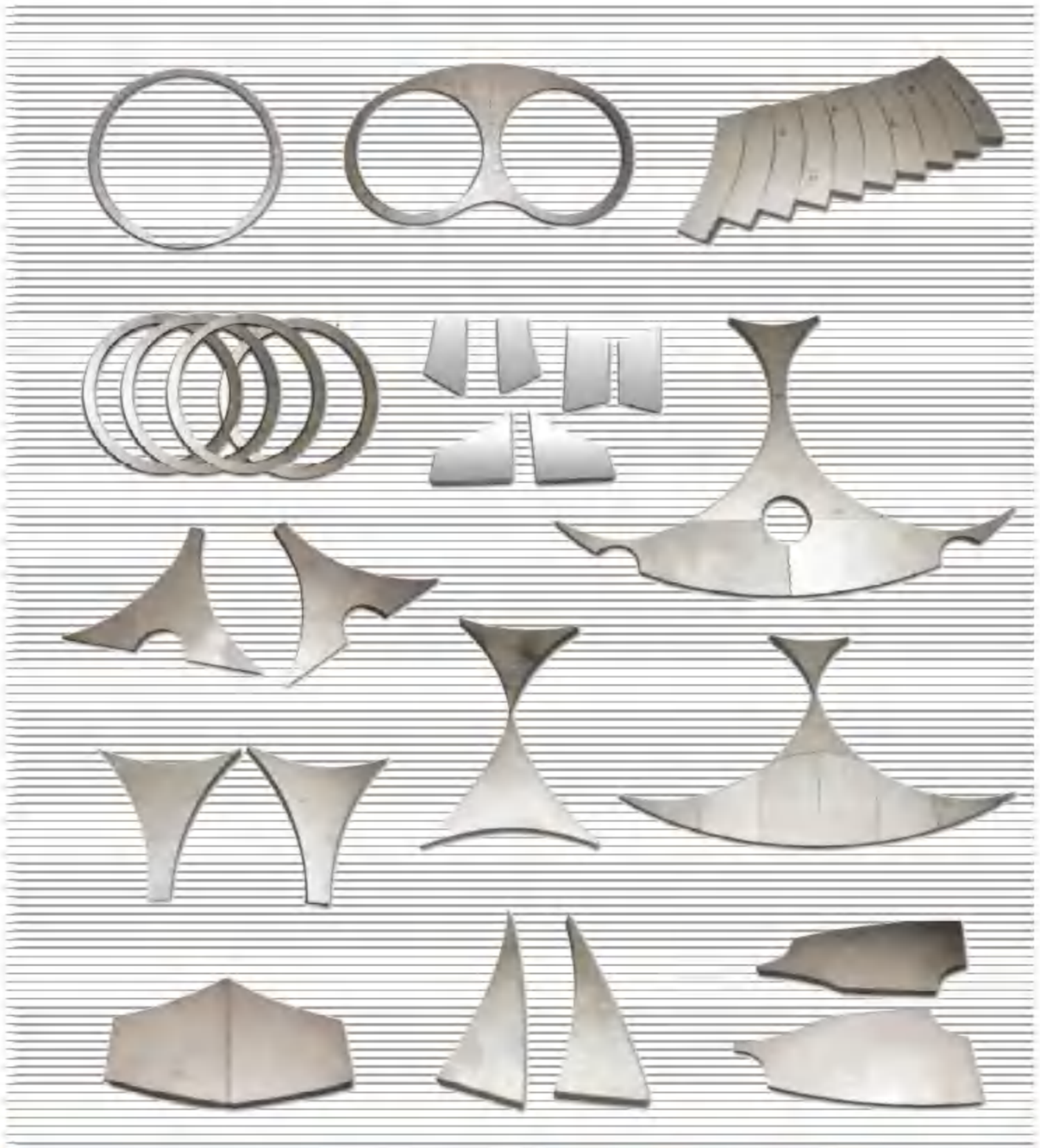

Tungsten carbide series technique parameter
硬质合金系列技术参数

Product Photo	Model	Density	Hardness	Bending strength	Applicable models
	HF20B	12.9-13.1	85.0~88.0	≥2500	It's attached to the carbide particles, advantages including wear-resistance and shock resistance, good toughness, mainly applies in hammer, breakable parts,coal mining tools and abrasion-proof rings or plates for concrete pump truck. 属中颗粒合金，耐磨性和抗冲击韧性好，适用于锤头、破碎机件、矿山工具及混泥土泵车耐磨环板等
	HF20B	12.6-12.8	85.0~87.0	≥2200	
	HF20B	12.5-13.7	84.0~86.0	≥2700	







S valve assembly fittings series of the delivery pump syestem

泵送系统S阀总成系列配件

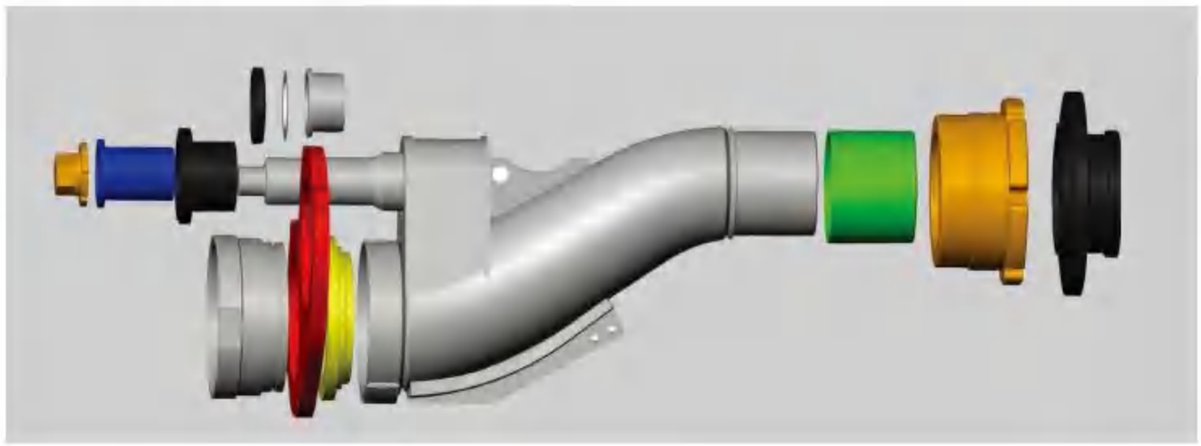

S valve assembly fittings series of the delivery pump syestem

泵送系统S阀总成系列配件

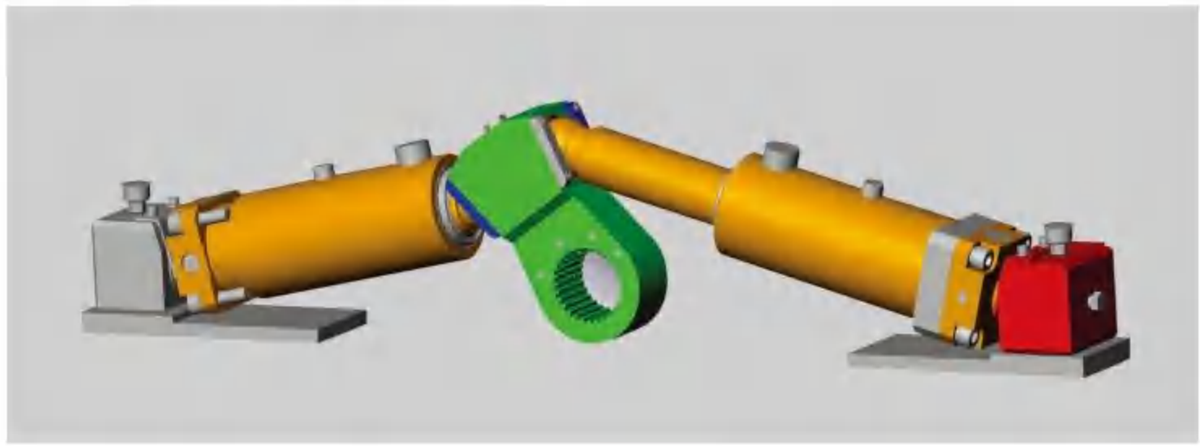





series of the delivery pump syestem

泵送系统S阀总成系列配件



SY

三一系列



ZL

中联系列

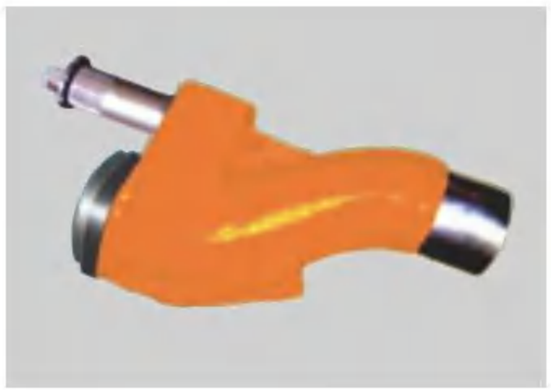

IHI

石川岛系列



FUKUDA

福田系列

S valve assembly fittings series of the delivery pump syestem

泵送系统S阀总成系列配件



S valve assembly fittings series of the delivery pump syestem
泵送系统S阀总成系列配件



Concrete delivery pump organization, it contains the concrete cylinder、concrete piston complement、water tank、piston rod、master cylinder and check valve combination.

混凝土泵送机构，它包括混凝土缸、混凝土活塞总成、水箱、油缸活塞杆、
主油缸以及单向球阀组合。

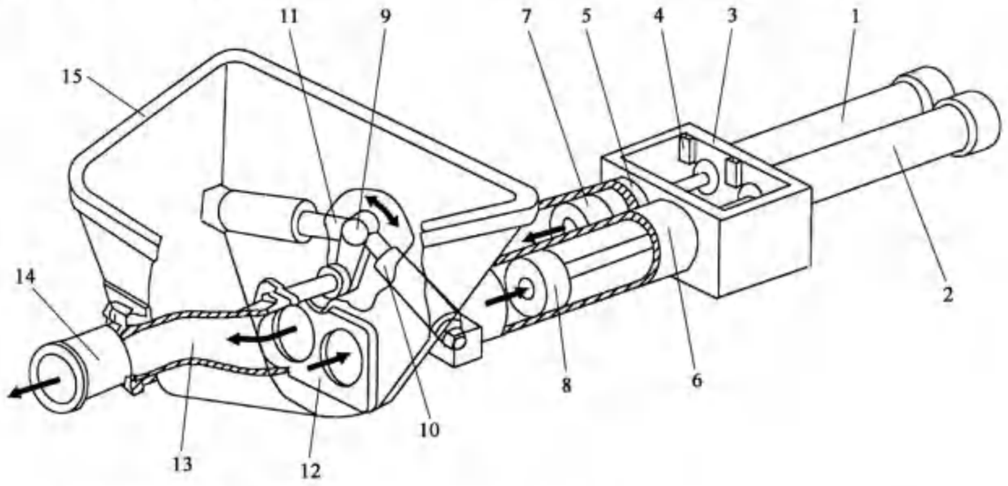

S阀泵送总成分解 S-pipe Valve Pumping Unit Explode View
1，2 主油缸 Hydraulic Cylinder； 3 水箱 Water Chamber； 4 换向机构 Proximity Switch；
5，6 混凝土缸 Concrete Cylinder； 7，8 混凝土缸活塞 Concrete Cylinder Piston；
9 摆臂 Swing Arm； 10,11摆动油缸Swing Cylinder； 12 眼镜板 Wear Plate；
13 分配阀 S-pipe Valve； 14 出料口 Outlet； 15 料斗 Hopper.

S valve assembly fittings series of the delivery pump syestem
泵送系统S阀总成系列配件



Grid safety device 料斗



Oil cylinder 油缸



Delivery cylinder 输送缸



Grid 筛网

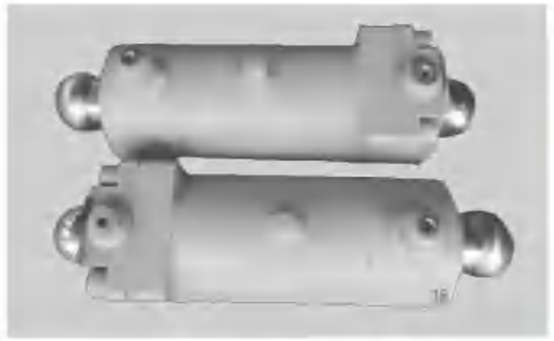

Swing Cylinder 摆缸



Delivery pump housing accessories series
泵送总成系列配件



Upper Wear Sleeve 小钢套



Swing Arm 摆臂

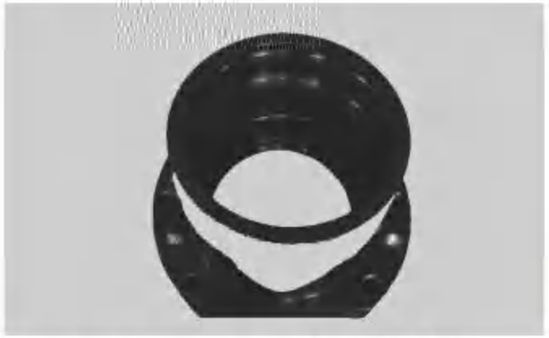

Flange bearing 小端轴套



Sealing 密封件



Intermediate Ring 过渡套

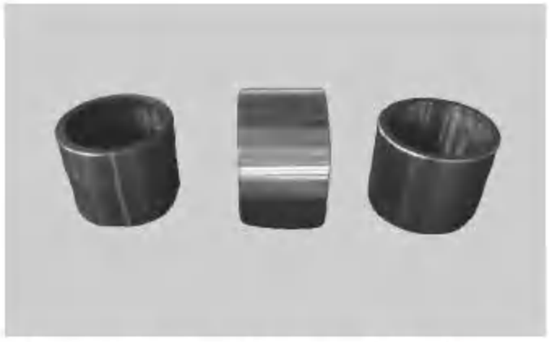

Outer Wear Sleeve 大缸套

Delivery pump housing accessories series
泵送总成系列配件

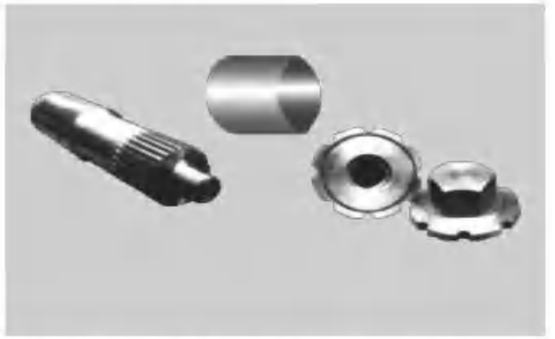

Spline shaft、Heresy nut
花键轴、异型螺母



Outer housing 大端轴承座



Outlet 出料口

Delivery pump housing accessories series
泵送总成系列配件



End cover 端盖
Penetrable cover 透盖



Mixer shaft 搅拌轴



Piston connection plate
活塞连接盘



Stop collar 限位套



Piston Set 活塞总成



Piston joint lever 活塞连接杆
Compression plate 压盘

Delivery pump housing accessories series
泵送总成系列配件



Mixing pad 搅拌叶



Motor seat 马达座
Motor 马达



Piston joint lever 活塞连接杆
Compression plate 压盘



SERVICE IS ENDLESS
服务永无止境

TRANSACTION IS JUST THE BEGINNING
成交只是开始

A LIFETIME FRIEND
终身朋友

ONCE DEAL
一次客户

"Soliciting clients in earnest，Win reputation by quality".
From the beginning, in order to win the customer's trust and support, our company always attache great importance to friendly cooperate with customers, to ensure quality and service, and to value honor.
"To widely cooperate with friends and to share prosperity" has become our most sincere pursuit.

“诚招天下客，誉从质中来”。长期以来，公司十分注重与客户的友好合作，保证品质与服务，珍视荣誉，从而赢得了客户的信赖与支持。与朋友广泛合作，共享繁荣，也成为我们最真诚的追求。